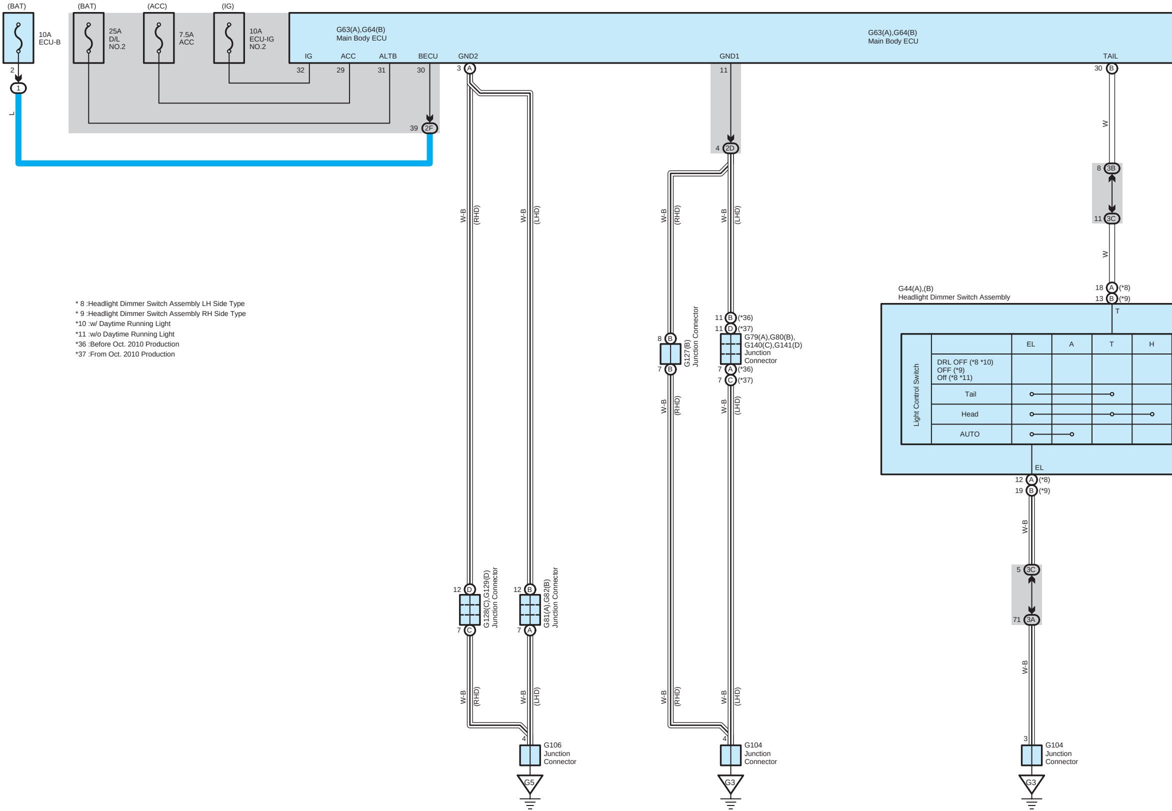
(BAT)
10A
ECU-B
(BAT)
25A
D/L
NO.2
(ACC)
7.5A
ACC
(IG)
10A
ECU-IG
NO.2
G63(A),G64(B)
Main Body ECU
IG
ACC
ALTB
BECU
GND2
GND1
TAIL
32
29
31
30
3
A
11
30
B
2
1
L
39
2F
4
2D
W
8
3B
11
3C
W
W-B
(RHD)
W-B
(LHD)
G44(A),(B)
Headlight Dimmer Switch Assembly
18
A
(*8)
13
B
(*9)
T
Light Control Switch
EL
A
T
H
DRL OFF (*8 *10)
OFF (*9)
Off (*8 *11)
Tail
Head
AUTO
EL
12
A
(*8)
19
B
(*9)
5
3C
71
3A
3
G104
Junction
Connector
G3
8
B
7
B
G127(B)
Junction Connector
11
B
(*36)
11
D
(*37)
G79(A),G80(B),
G140(C),G141(D)
Junction
Connector
7
A
(*36)
7
C
(*37)
4
G104
Junction
Connector
G3
12
D
7
C
G128(C),G129(D)
Junction Connector
12
B
7
A
G81(A),G82(B)
Junction Connector
4
G106
Junction
Connector
G5

* 8 :Headlight Dimmer Switch Assembly LH Side Type
* 9 :Headlight Dimmer Switch Assembly RH Side Type
*10 :w/ Daytime Running Light
*11 :w/o Daytime Running Light
*36 :Before Oct. 2010 Production
*37 :From Oct. 2010 Production

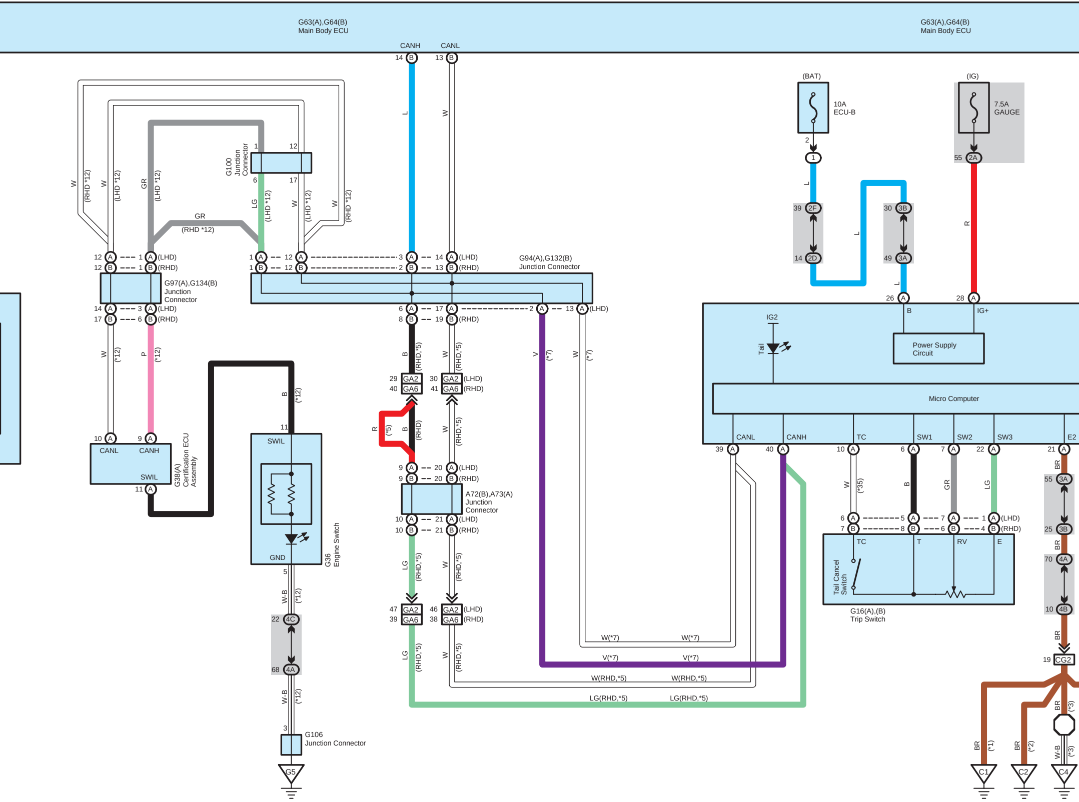
G63(A),G64(B)
Main Body ECU
G63(A),G64(B)
Main Body ECU
CANH
CANL
14 B
13 B
L
W
(BAT)
10A
ECU-B
(IG)
7.5A
GAUGE
2
1
55 2A
L
R
39 2F
14 2D
30 3B
49 3A
L
26 A
28 A
B
IG+
IG2
Tail
Power Supply
Circuit
Micro Computer
CANL
CANH
TC
SW1
SW2
SW3
E2
39 A
40 A
10 A
6 A
7 A
22 A
21 A
W
(*35)
B
GR
LG
BR
55 3A
25 3B
70 4A
10 4B
19 CG2
6 A
7 B
5 A
8 B
7 A
6 B
1 A
4 B
(LHD)
(RHD)
TC
T
RV
E
Tail Cancel
Switch
G16(A),(B)
Trip Switch
BR (*1)
BR (*2)
BR (*3)
W-B (*3)
C1
C2
C4
W (RHD *12)
W (LHD *12)
GR (LHD *12)
GR
(RHD *12)
G100
Junction
Connector
1
12
6
17
LG (LHD *12)
W (LHD *12)
W (RHD *12)
12 A
12 B
1 A (LHD)
1 B (RHD)
G97(A),G134(B)
Junction
Connector
14 A
17 B
3 A (LHD)
6 B (RHD)
1 A
1 B
12 A
12 B
3 A
2 B
14 A (LHD)
13 B (RHD)
G94(A),G132(B)
Junction Connector
6 A
8 B
17 A
19 B (RHD)
2 A
13 A (LHD)
W (*12)
P (*12)
10 A
9 A
CANL
CANH
SWIL
11 A
G38(A)
Certification ECU
Assembly
B (*12)
11
SWIL
GND
G36
Engine Switch
5
W-B (*12)
22 4C
68 4A
W-B (*12)
3
G106
Junction Connector
G5
B (RHD,*5)
W (RHD,*5)
29 GA2
40 GA6
30 GA2 (LHD)
41 GA6 (RHD)
R (*5)
B (RHD)
W (RHD,*5)
9 A
9 B
20 A (LHD)
20 B (RHD)
A72(B),A73(A)
Junction
Connector
10 A
10 B
21 A (LHD)
21 B (RHD)
LG (RHD,*5)
W (RHD,*5)
47 GA2
39 GA6
46 GA2 (LHD)
38 GA6 (RHD)
LG (RHD,*5)
W (RHD,*5)
V (*7)
W (*7)
W(*7)
W(*7)
V(*7)
V(*7)
W(RHD,*5)
W(RHD,*5)
LG(RHD,*5)
LG(RHD,*5)

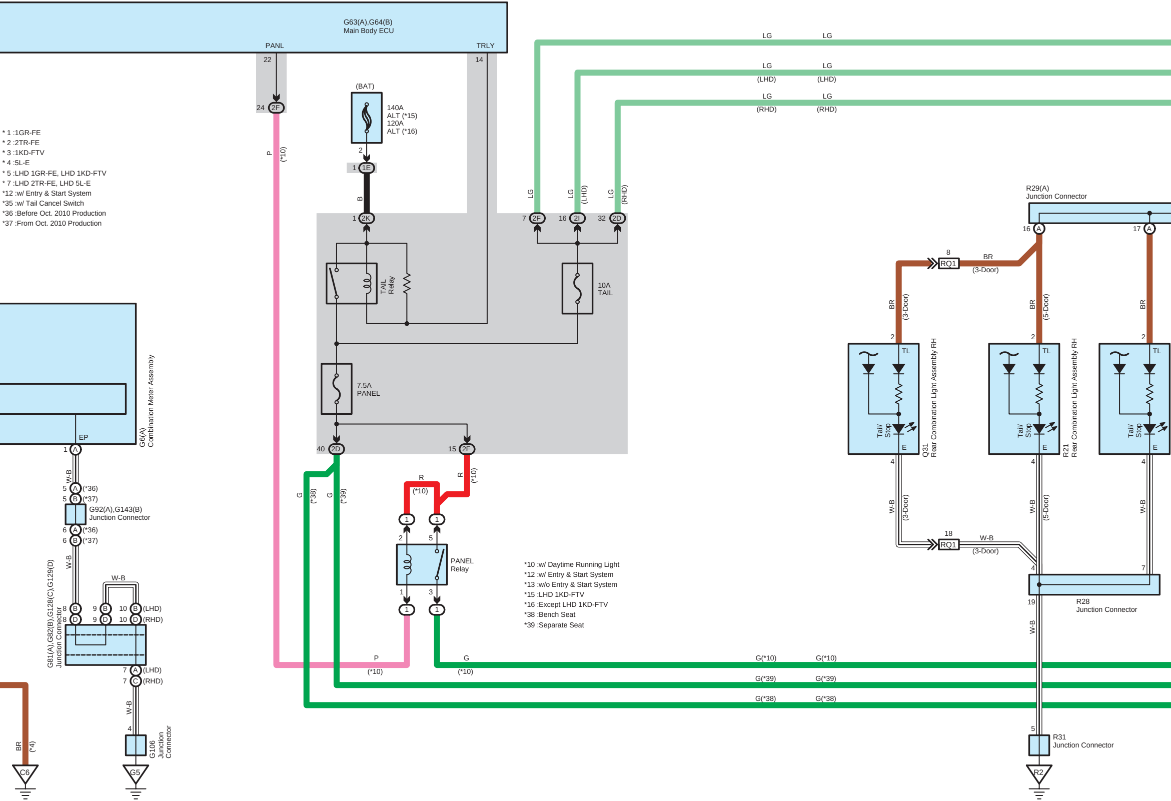
G63(A),G64(B)
Main Body ECU
PANL
TRLY
22
14
24
2F
P
(*10)
(BAT)
140A
ALT (*15)
120A
ALT (*16)
2
1
1E
B
1
2K
TAIL
Relay
10A
TAIL
7.5A
PANEL
40
2D
15
2F
LG
(LHD)
(RHD)
7
2F
16
2I
32
2D
R29(A)
Junction Connector
16
A
17
A
8
RQ1
BR
(3-Door)
(5-Door)
2
TL
Tail/
Stop
E
4
Q31
Rear Combination Light Assembly RH
R21
Rear Combination Light Assembly RH
W-B
18
RQ1
7
19
R28
Junction Connector
5
R31
Junction Connector
R2
G6(A)
Combination Meter Assembly
EP
1
A
5
A
(*36)
B
(*37)
G92(A),G143(B)
Junction Connector
6
G81(A),G82(B),G128(C),G129(D)
Junction Connector
8
9
10
B
D
(LHD)
(RHD)
C
4
G106
Junction
Connector
G5
BR
(*4)
C6
G
(*38)
(*39)
R
(*10)
PANEL
Relay
1
2
5
3
G(*10)
G(*39)
G(*38)

* 1 :1GR-FE
* 2 :2TR-FE
* 3 :1KD-FTV
* 4 :5L-E
* 5 :LHD 1GR-FE, LHD 1KD-FTV
* 7 :LHD 2TR-FE, LHD 5L-E
*12 :w/ Entry & Start System
*35 :w/ Tail Cancel Switch
*36 :Before Oct. 2010 Production
*37 :From Oct. 2010 Production

*10 :w/ Daytime Running Light
*12 :w/ Entry & Start System
*13 :w/o Entry & Start System
*15 :LHD 1KD-FTV
*16 :Except LHD 1KD-FTV
*38 :Bench Seat
*39 :Separate Seat

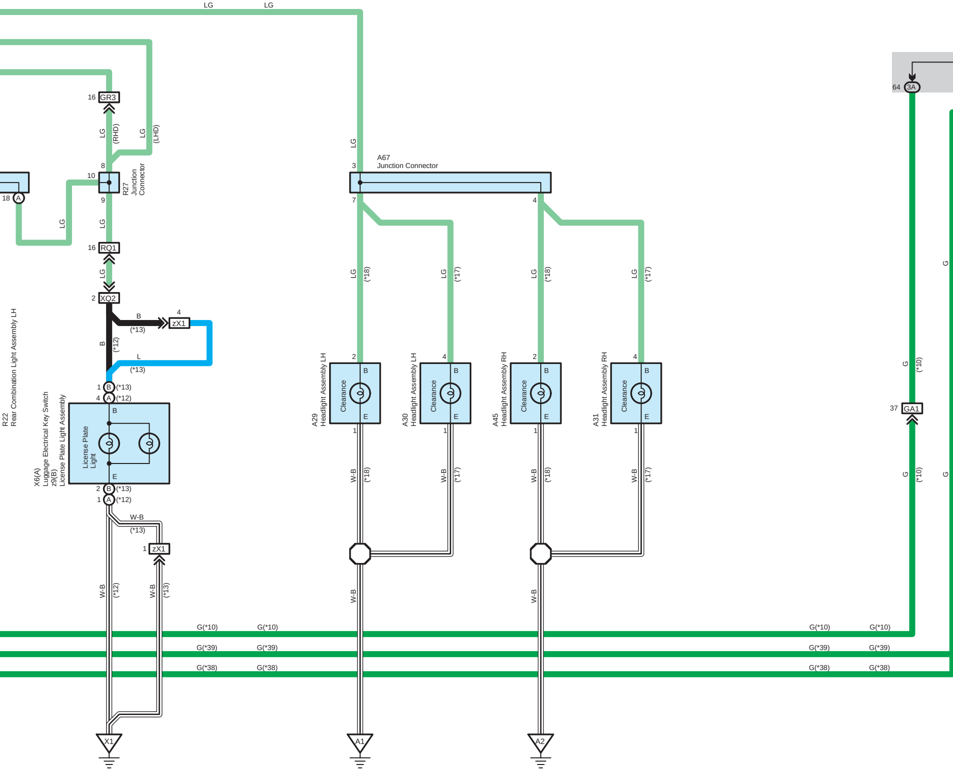

LG
LG
16 GR3
LG (RHD)
LG (LHD)
8
10
9
R27 Junction Connector
18 A
LG
LG
16 RQ1
LG
2 XQ2
B (*13)
4 zX1
B (*12)
L (*13)
1 B (*13)
4 A (*12)
R22 Rear Combination Light Assembly LH
X6(A) Luggage Electrical Key Switch
z9(B) License Plate Light Assembly
License Plate Light
B
E
2 B (*13)
1 A (*12)
W-B (*13)
1 zX1
W-B (*12)
W-B (*13)
X1
LG
3
A67 Junction Connector
7
4
LG (*18)
LG (*17)
LG (*18)
LG (*17)
2
4
2
4
A29 Headlight Assembly LH
A30 Headlight Assembly LH
A45 Headlight Assembly RH
A31 Headlight Assembly RH
Clearance
B
E
1
W-B (*18)
W-B (*17)
W-B (*18)
W-B (*17)
W-B
W-B
A1
A2
64 3A
G (*10)
37 GA1
G (*10)
G
G
G(*10)
G(*39)
G(*38)

*10 :w/ Daytime Running Light
*17 :HID Type
*18 :Except HID Type
*36 :Before Oct. 2010 Production
*37 :From Oct. 2010 Production
*38 :Bench Seat
*39 :Separate Seat

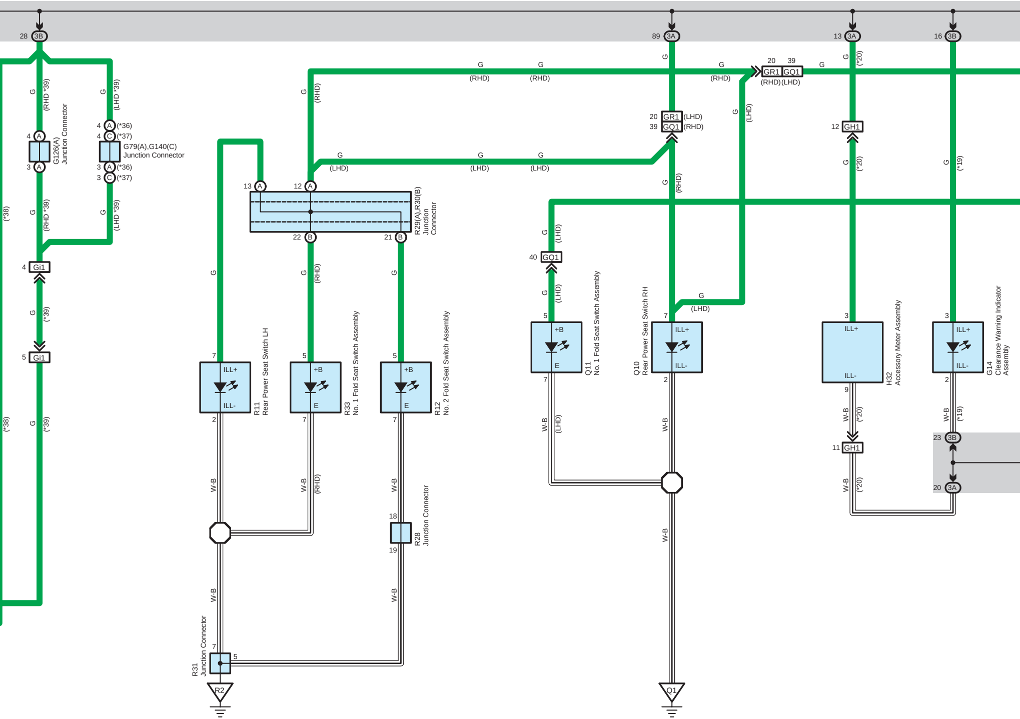
28 3B
89 3A
13 3A
16 3B
G126(A) Junction Connector
G79(A),G140(C) Junction Connector
4 A
3 A
4 A (*36)
4 C (*37)
3 A (*36)
3 C (*37)
(RHD *39)
(LHD *39)
(*38)
(*39)
4 Gi1
5 Gi1
13 A
12 A
22 B
21 B
R29(A),R30(B) Junction Connector
20 39
GR1 GQ1
(RHD) (LHD)
20 GR1 (LHD)
39 GQ1 (RHD)
12 GH1
11 GH1
40 GQ1
G
W-B
(RHD)
(LHD)
(*20)
(*19)
R11 Rear Power Seat Switch LH
ILL+
ILL-
R33 No. 1 Fold Seat Switch Assembly
+B
E
R12 No. 2 Fold Seat Switch Assembly
Q11 No. 1 Fold Seat Switch Assembly
Q10 Rear Power Seat Switch RH
H32 Accessory Meter Assembly
G14 Clearance Warning Indicator Assembly
R28 Junction Connector
18
19
R31 Junction Connector
7
5
23 3B
20 3A
R2
Q1

*19 :w/ Clearance Warning Indicator Assembly
*20 :w/ Driving Support Switch Control ECU
*36 :Before Oct. 2010 Production
*37 :From Oct. 2010 Production

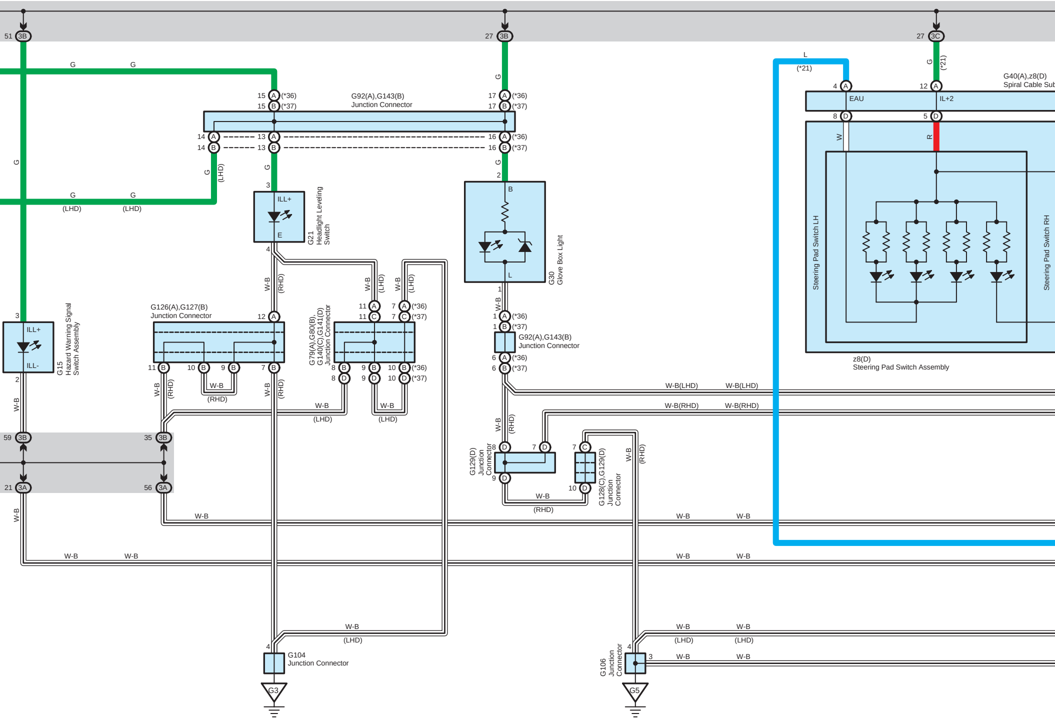
51 3B
27 3B
27 3C
G
L
(*21)
4 A
12 A
G40(A),z8(D)
Spiral Cable Sub
EAU
IL+2
8 D
5 D
W
R
15 A (*36)
15 B (*37)
G92(A),G143(B)
Junction Connector
17 A (*36)
17 B (*37)
14 A
14 B
13 A
13 B
16 A (*36)
16 B (*37)
(LHD)
3
ILL+
E
4
G21
Headlight Leveling
Switch
2
B
L
1
G30
Glove Box Light
Steering Pad Switch LH
Steering Pad Switch RH
z8(D)
Steering Pad Switch Assembly
W-B
(RHD)
(LHD)
ILL-
G15
Hazard Warning Signal
Switch Assembly
G126(A),G127(B)
Junction Connector
12 A
11 B
10 B
9 B
7 B
G79(A),G80(B),
G140(C),G141(D)
Junction Connector
11 A
11 C
7 A (*36)
7 C (*37)
8 B
8 D
9 B
9 D
10 B (*36)
10 D (*37)
1 A (*36)
1 B (*37)
G92(A),G143(B)
Junction Connector
6 A (*36)
6 B (*37)
W-B(LHD)
W-B(RHD)
59 3B
35 3B
21 3A
56 3A
G129(D)
Junction
Connector
8 D
7 D
9 D
7 C
10 D
G128(C),G129(D)
Junction
Connector
G104
Junction Connector
G3
G106
Junction
Connector
3
G5

*21 :w/ Navigation System

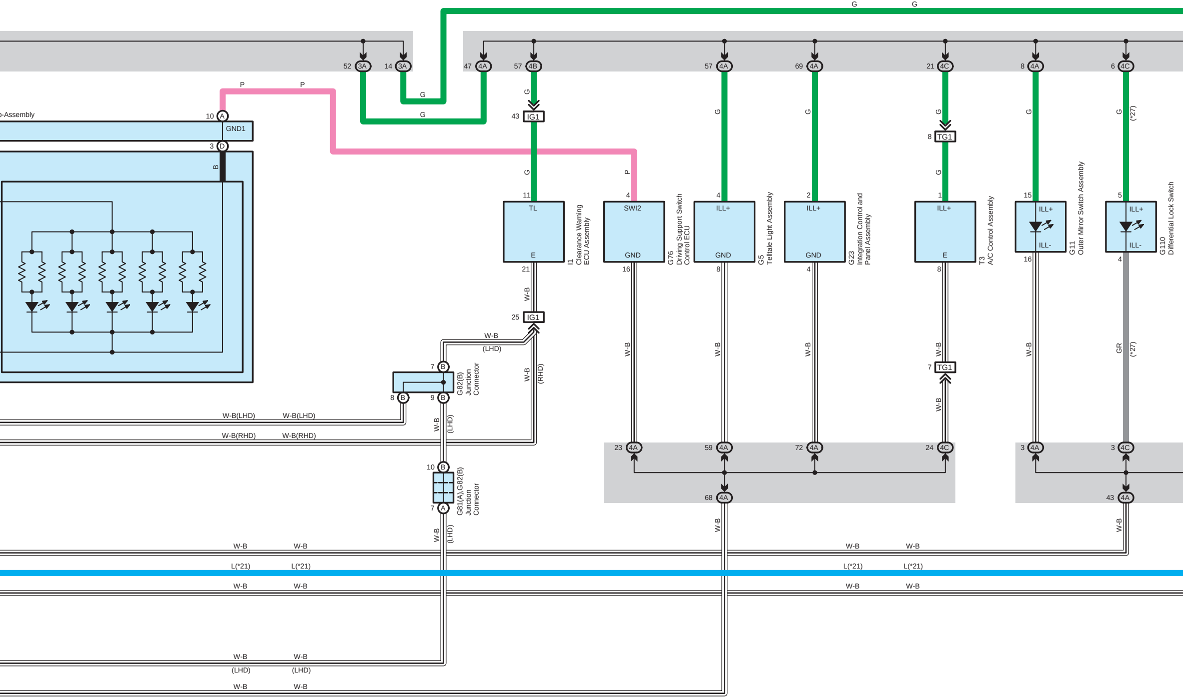
G
G
52 3A
14 3A
47 4A
57 4B
57 4A
69 4A
21 4C
8 4A
6 4C
P
P
G
G
o-Assembly
10 A
GND1
3 D
B
G
43 IG1
G
11
TL
E
21
I1
Clearance Warning
ECU Assembly
P
4
SWI2
GND
16
G76
Driving Support Switch
Control ECU
G
4
ILL+
GND
8
G5
Telltale Light Assembly
G
2
ILL+
GND
4
G23
Integration Control and
Panel Assembly
G
8 TG1
G
1
ILL+
E
8
T3
A/C Control Assembly
G
15
ILL+
ILL-
16
G11
Outer Mirror Switch Assembly
G
(*27)
5
ILL+
ILL-
4
G110
Differential Lock Switch
W-B
25 IG1
W-B
(LHD)
W-B
(RHD)
7 B
8 B
9 B
G82(B)
Junction
Connector
W-B(LHD)
W-B(LHD)
W-B(RHD)
W-B(RHD)
W-B
(LHD)
W-B
W-B
W-B
W-B
7 TG1
W-B
W-B
GR
(*27)
23 4A
59 4A
72 4A
24 4C
3 4A
3 4C
68 4A
43 4A
10 B
7 A
G81(A),G82(B)
Junction
Connector
W-B
(LHD)
W-B
W-B
W-B
W-B
W-B
W-B
L(*21)
L(*21)
L(*21)
L(*21)
W-B
W-B
W-B
W-B
W-B
W-B
(LHD)
(LHD)
W-B
W-B

*21 :w/ Navigation System
*22 :w/ Pattern Select Switch Assembly
*23 :w/ Electronic Modulated Air Suspension
*24 :w/ Entry & Start System w/ Seat Heater
*25 :w/o Entry & Start System w/ Seat Heater
*26 :w/ Front Window Deicer
*27 :w/ Rear Differential Lock

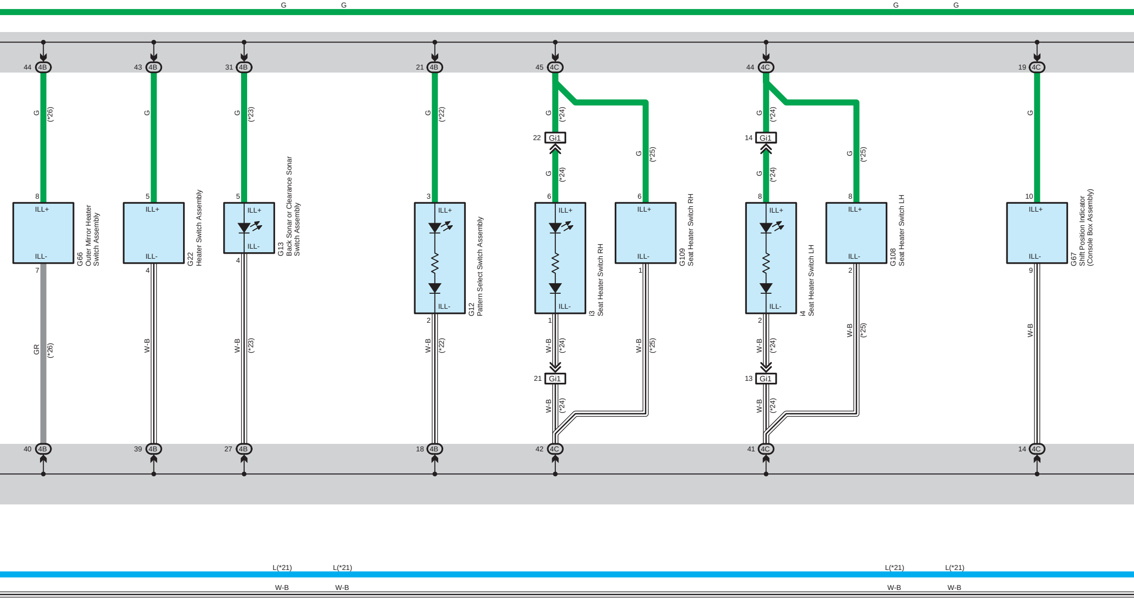
G
G
G
G
44 4B
G (*26)
8
ILL+
ILL-
7
GR (*26)
40 4B
G66
Outer Mirror Heater
Switch Assembly
43 4B
G
5
ILL+
ILL-
4
W-B
39 4B
G22
Heater Switch Assembly
31 4B
G (*23)
5
ILL+
ILL-
4
W-B (*23)
27 4B
G13
Back Sonar or Clearance Sonar
Switch Assembly
21 4B
G (*22)
3
ILL+
ILL-
2
W-B (*22)
18 4B
G12
Pattern Select Switch Assembly
45 4C
G (*24)
22 Gi1
G (*24)
6
ILL+
ILL-
1
W-B (*24)
21 Gi1
W-B (*24)
42 4C
i3
Seat Heater Switch RH
G (*25)
6
ILL+
ILL-
1
W-B (*25)
G109
Seat Heater Switch RH
44 4C
G (*24)
14 Gi1
G (*24)
8
ILL+
ILL-
2
W-B (*24)
13 Gi1
W-B (*24)
41 4C
i4
Seat Heater Switch LH
G (*25)
8
ILL+
ILL-
2
W-B (*25)
G108
Seat Heater Switch LH
19 4C
G
10
ILL+
ILL-
9
W-B
14 4C
G67
Shift Position Indicator
(Console Box Assembly)
L(*21)
L(*21)
L(*21)
L(*21)
W-B
W-B
W-B
W-B

*21 :w/ Navigation System
*23 :w/ Electronic Modulated Air Suspension
*27 :w/ Rear Differential Lock
*28 :A/T Except 2TR-FE

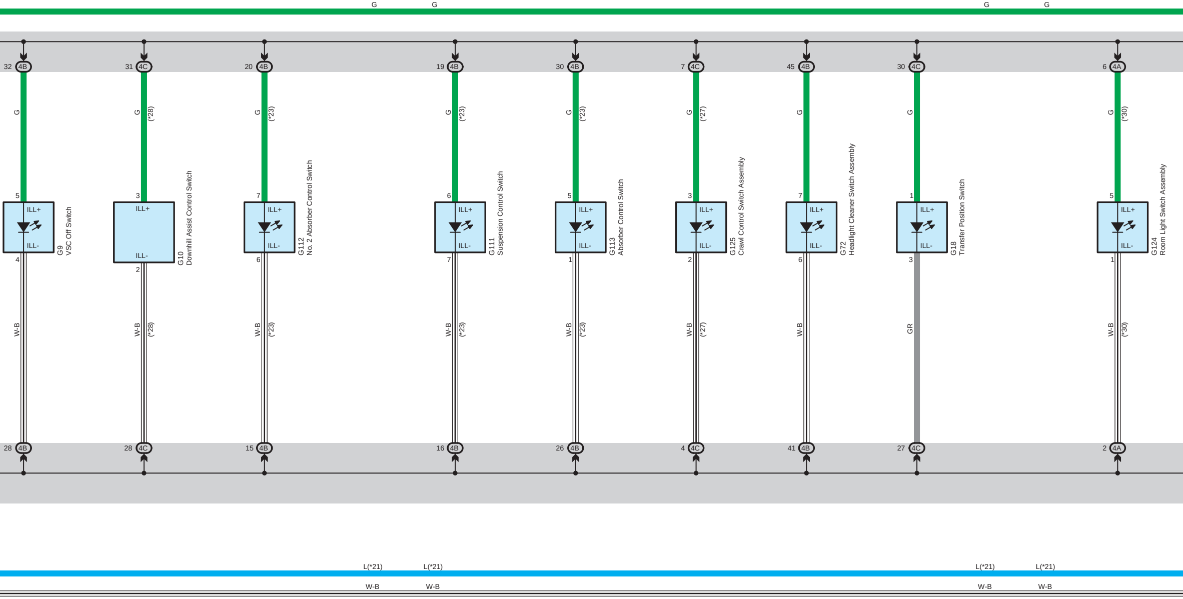
G
G
G
G
32 4B
31 4C
20 4B
19 4B
30 4B
7 4C
45 4B
30 4C
6 4A
G
G (*28)
G (*23)
G (*23)
G (*23)
G (*27)
G
G
G (*30)
5
ILL+
ILL-
4
G9
VSC Off Switch
3
ILL+
ILL-
2
G10
Downhill Assist Control Switch
7
ILL+
ILL-
6
G112
No. 2 Absorber Control Switch
6
ILL+
ILL-
7
G111
Suspension Control Switch
5
ILL+
ILL-
1
G113
Absorber Control Switch
3
ILL+
ILL-
2
G125
Crawl Control Switch Assembly
7
ILL+
ILL-
6
G72
Headlight Cleaner Switch Assembly
1
ILL+
ILL-
3
G18
Transfer Position Switch
5
ILL+
ILL-
1
G124
Room Light Switch Assembly
W-B
W-B (*28)
W-B (*23)
W-B (*23)
W-B (*23)
W-B (*27)
W-B
GR
W-B (*30)
28 4B
28 4C
15 4B
16 4B
26 4B
4 4C
41 4B
27 4C
2 4A
L(*21)
L(*21)
L(*21)
L(*21)
W-B
W-B
W-B
W-B

* 3 :1KD-FTV
*21 :w/ Navigation System
*30 :w/ Cool Box
*32 :w/ Center Differential Lock
*33 :6 Speaker w/o Navigation System
*34 :9 Speaker w/o Navigation System

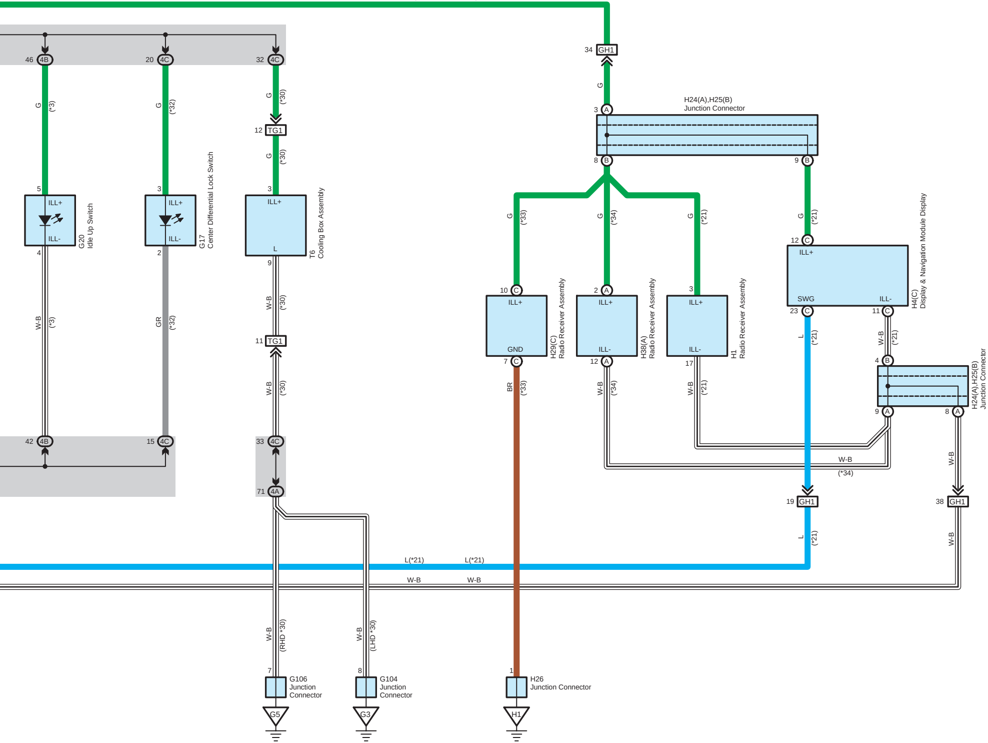
G
G
46 4B
20 4C
32 4C
G (*3)
G (*32)
G (*30)
12 TG1
G (*30)
5
ILL+
ILL-
4
G20
Idle Up Switch
3
ILL+
ILL-
2
G17
Center Differential Lock Switch
3
ILL+
L
9
T6
Cooling Box Assembly
W-B (*3)
GR (*32)
W-B (*30)
11 TG1
W-B (*30)
42 4B
15 4C
33 4C
71 4A
34 GH1
G
3 A
H24(A),H25(B)
Junction Connector
8 B
9 B
G (*33)
G (*34)
G (*21)
G (*21)
10 C
ILL+
GND
7 C
H29(C)
Radio Receiver Assembly
2 A
ILL+
ILL-
12 A
H38(A)
Radio Receiver Assembly
3
ILL+
ILL-
17
H1
Radio Receiver Assembly
12 C
ILL+
SWG
ILL-
23 C
11 C
H4(C)
Display & Navigation Module Display
BR (*33)
W-B (*34)
W-B (*21)
L (*21)
W-B (*21)
4 B
9 A
8 A
H24(A),H25(B)
Junction Connector
W-B
(*34)
W-B
19 GH1
38 GH1
L (*21)
W-B
L(*21)
L(*21)
W-B
W-B
W-B (RHD *30)
W-B (LHD *30)
7
G106
Junction
Connector
8
G104
Junction
Connector
1
H26
Junction Connector
G5
G3
H1